KOHLER® SERVICE PARTS
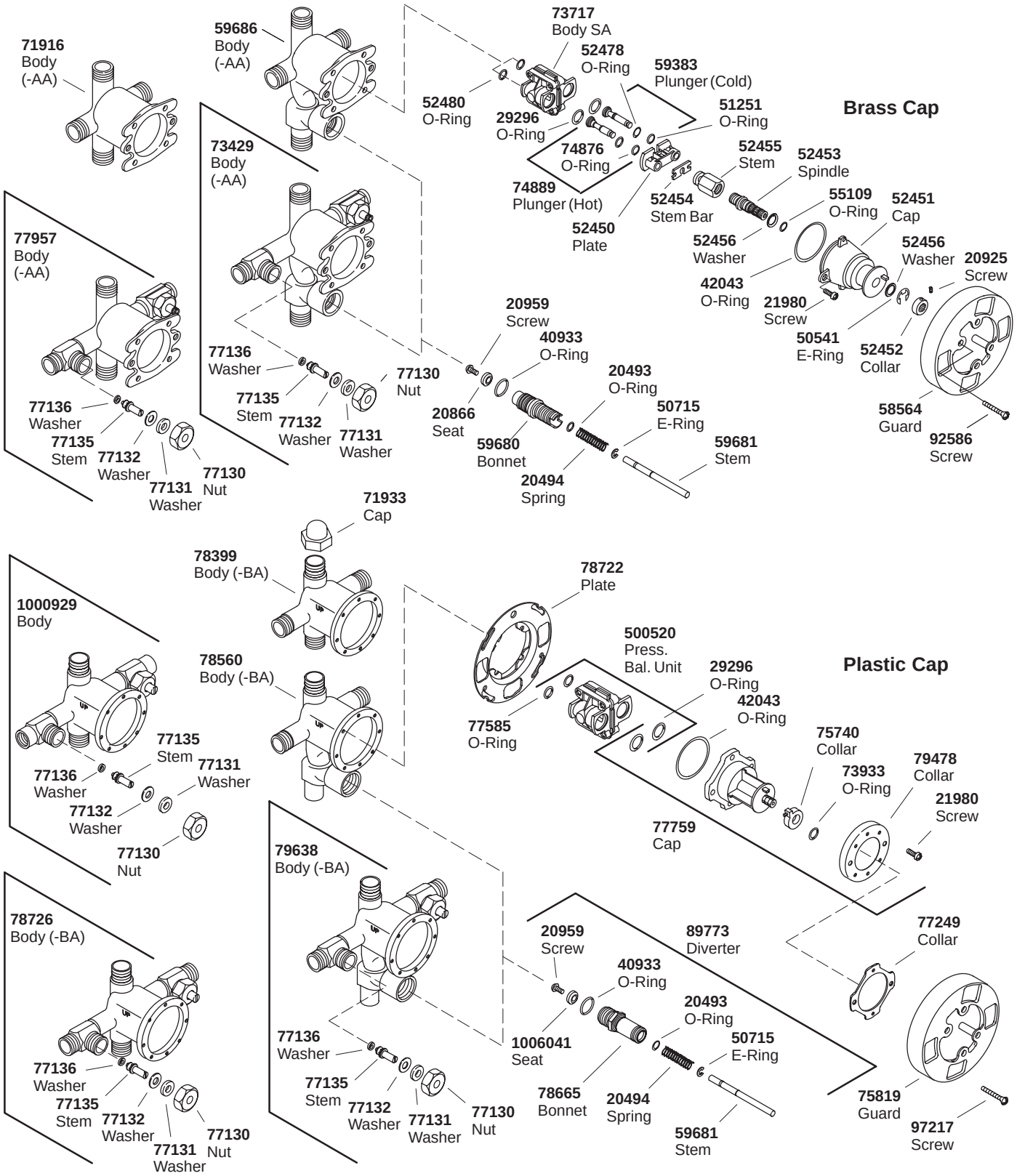
RITE-TEMP™
PRESSURE-BALANCING VALVES