KOHLER® SERVICE PARTS
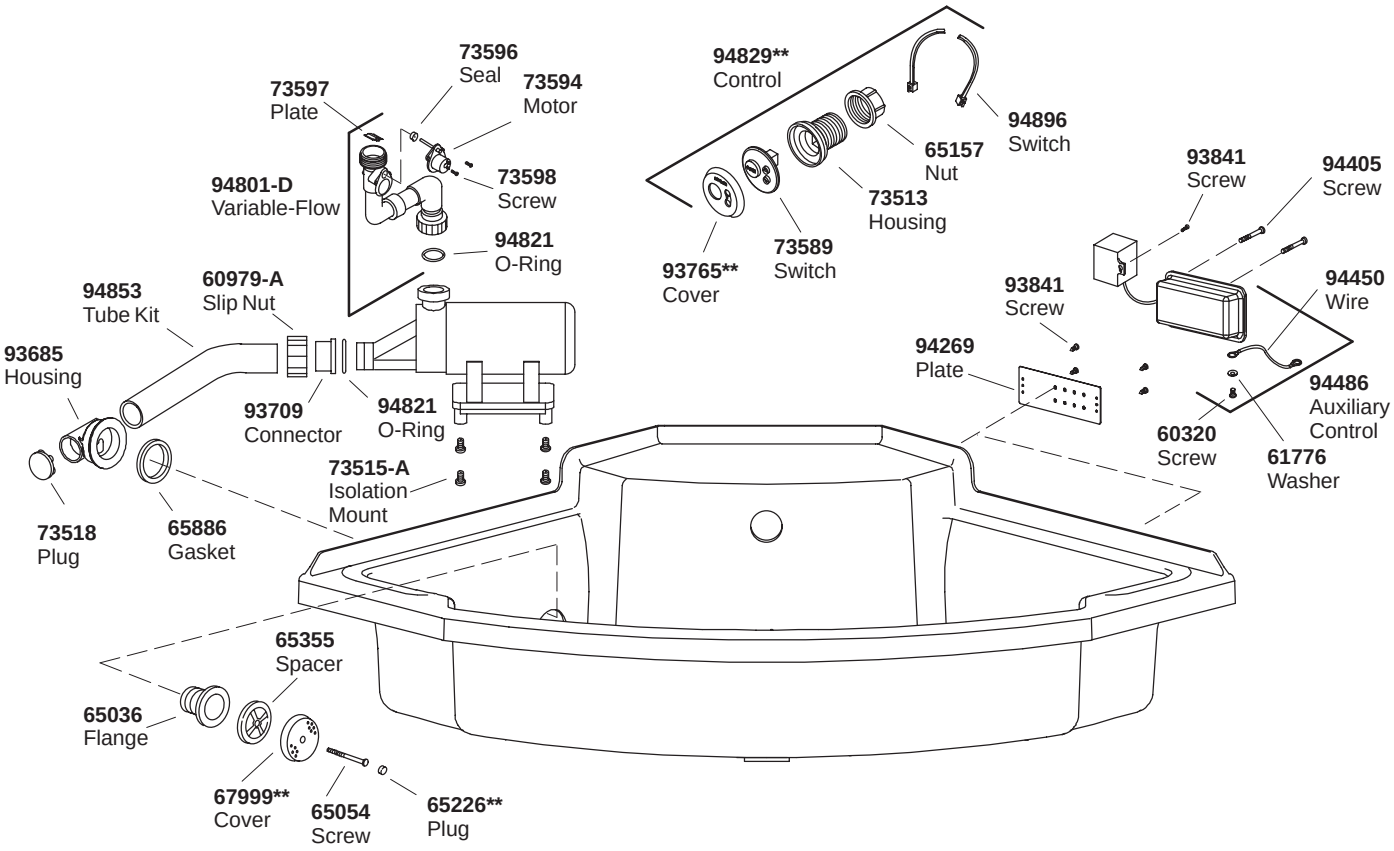
BODYSPA ™
CORNER FOOTBATH