KOHLER® SERVICE PARTS
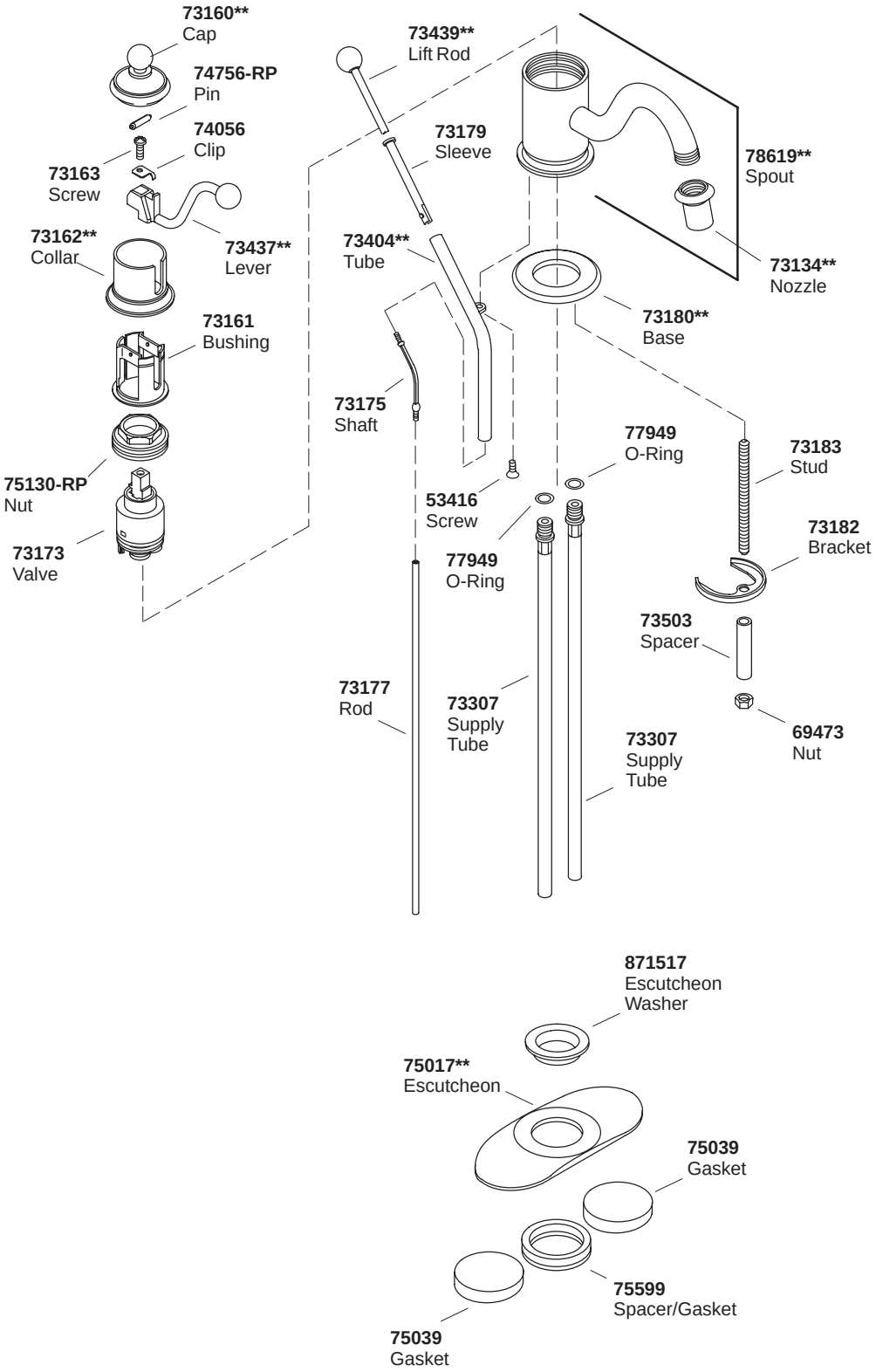
ANTIQUE™ SINGLE-CONTROL LAVATORY FAUCET